Cambridge International AS & A Level

Cambridge International Examinations
Cambridge International Advanced Subsidiary and Advanced Level

CANDIDATE NAME

CENTRE NUMBER

CANDIDATE NUMBER

3828804905

PHYSICS **9702/42**

Paper 4 A Level Structured Questions **May/June 2017**

2 hours

Candidates answer on the Question Paper.

No Additional Materials are required.

READ THESE INSTRUCTIONS FIRST

Write your Centre number, candidate number and name on all the work you hand in.
Write in dark blue or black pen.
You may use an HB pencil for any diagrams or graphs.
Do not use staples, paper clips, glue or correction fluid.
DO **NOT** WRITE IN ANY BARCODES.

Answer **all** questions.

Electronic calculators may be used.
You may lose marks if you do not show your working or if you do not use appropriate units.

At the end of the examination, fasten all your work securely together.
The number of marks is given in brackets [ ] at the end of each question or part question.

This document consists of **24** printed pages.

© UCLES 2017

CAMBRIDGE International Examinations

Data

speed of light in free space	$c = 3.00 \times 10^{8}\,\text{m s}^{-1}$
permeability of free space	$\mu_0 = 4\pi \times 10^{-7}\,\text{H m}^{-1}$
permittivity of free space	$\varepsilon_0 = 8.85 \times 10^{-12}\,\text{F m}^{-1}$
	$(\frac{1}{4\pi\varepsilon_0} = 8.99 \times 10^{9}\,\text{m F}^{-1})$
elementary charge	$e = 1.60 \times 10^{-19}\,\text{C}$
the Planck constant	$h = 6.63 \times 10^{-34}\,\text{J s}$
unified atomic mass unit	$1\,\text{u} = 1.66 \times 10^{-27}\,\text{kg}$
rest mass of electron	$m_e = 9.11 \times 10^{-31}\,\text{kg}$
rest mass of proton	$m_p = 1.67 \times 10^{-27}\,\text{kg}$
molar gas constant	$R = 8.31\,\text{J K}^{-1}\,\text{mol}^{-1}$
the Avogadro constant	$N_A = 6.02 \times 10^{23}\,\text{mol}^{-1}$
the Boltzmann constant	$k = 1.38 \times 10^{-23}\,\text{J K}^{-1}$
gravitational constant	$G = 6.67 \times 10^{-11}\,\text{N m}^2\,\text{kg}^{-2}$
acceleration of free fall	$g = 9.81\,\text{m s}^{-2}$

© UCLES 2017

Formulae

uniformly accelerated motion	$s = ut + \frac{1}{2}at^2$ $v^2 = u^2 + 2as$
work done on/by a gas	$W = p\Delta V$
gravitational potential	$\phi = -\frac{Gm}{r}$
hydrostatic pressure	$p = \rho gh$
pressure of an ideal gas	$p = \frac{1}{3}\frac{Nm}{V}\langle c^2 \rangle$
simple harmonic motion	$a = -\omega^2 x$
velocity of particle in s.h.m.	$v = v_0 \cos \omega t$ $v = \pm \omega \sqrt{(x_0^2 - x^2)}$
Doppler effect	$f_o = \frac{f_s v}{v \pm v_s}$
electric potential	$V = \frac{Q}{4\pi\varepsilon_0 r}$
capacitors in series	$1/C = 1/C_1 + 1/C_2 + \ldots$
capacitors in parallel	$C = C_1 + C_2 + \ldots$
energy of charged capacitor	$W = \frac{1}{2}QV$
electric current	$I = Anvq$
resistors in series	$R = R_1 + R_2 + \ldots$
resistors in parallel	$1/R = 1/R_1 + 1/R_2 + \ldots$
Hall voltage	$V_H = \frac{BI}{ntq}$
alternating current/voltage	$x = x_0 \sin \omega t$
radioactive decay	$x = x_0 \exp(-\lambda t)$
decay constant	$\lambda = \frac{0.693}{t_{\frac{1}{2}}}$

© UCLES 2017

[Turn over

Answer **all** the questions in the spaces provided.

1 **(a)** Define *gravitational field strength*.

.....

.....[1]

(b) The mass of a spherical comet of radius 3.6 km is approximately 1.0×10^{13} kg.

(i) Assuming that the comet has constant density, calculate the gravitational field strength on the surface of the comet.

field strength = ... $N\,kg^{-1}$ [2]

(ii) A probe having a weight of 960 N on Earth lands on the comet.
Using your answer in **(i)**, determine the weight of the probe on the surface of the comet.

weight = ... N [2]

© UCLES 2017

(c) A second comet has a length of approximately 4.5 km and a width of approximately 2.6 km. Its outline is illustrated in Fig. 1.1.

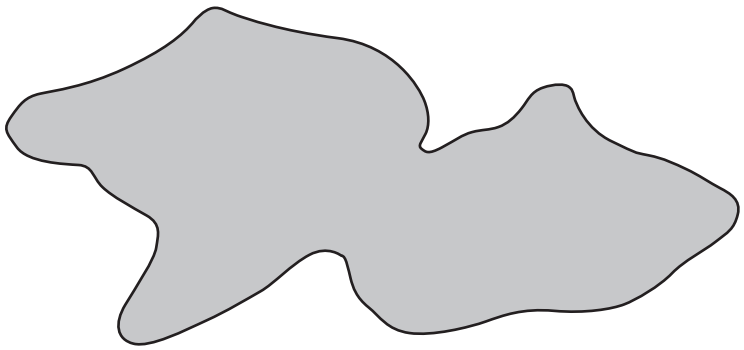

Fig. 1.1

Suggest one similarity and one difference between the gravitational fields at the surface of this comet and at the surface of the comet in **(b)**.

similarity: .....

.....

difference: .....

.....

[2]

[Total: 7]

2 **(a)** The pressure p and volume V of an ideal gas are related to the density ρ of the gas by the expression

$$p = \frac{1}{3}\rho\langle c^2\rangle.$$

(i) State what is meant by the symbol $\langle c^2\rangle$.

.....

.....[1]

(ii) Use the expression to show that the mean kinetic energy E_K of a gas molecule is given by

$$E_K = \frac{3}{2}kT$$

where k is the Boltzmann constant and T is the thermodynamic temperature.

[3]

(b) **(i)** An ideal gas containing 1.0 mol of molecules is heated at constant volume.
Use the expression in **(a)(ii)** to show that the thermal energy required to raise the temperature of the gas by 1.0 K has a value of $\frac{3}{2}R$, where R is the molar gas constant.

[3]

© UCLES 2017

(ii) Nitrogen may be assumed to be an ideal gas. The molar mass of nitrogen gas is $28\,g\,mol^{-1}$. Use the answer in **(b)(i)** to calculate a value for the specific heat capacity, in $J\,kg^{-1}\,K^{-1}$, at constant volume for nitrogen.

specific heat capacity = ... $J\,kg^{-1}\,K^{-1}$ [2]

[Total: 9]

3 A bar magnet of mass 250 g is suspended from the free end of a spring, as illustrated in Fig. 3.1.

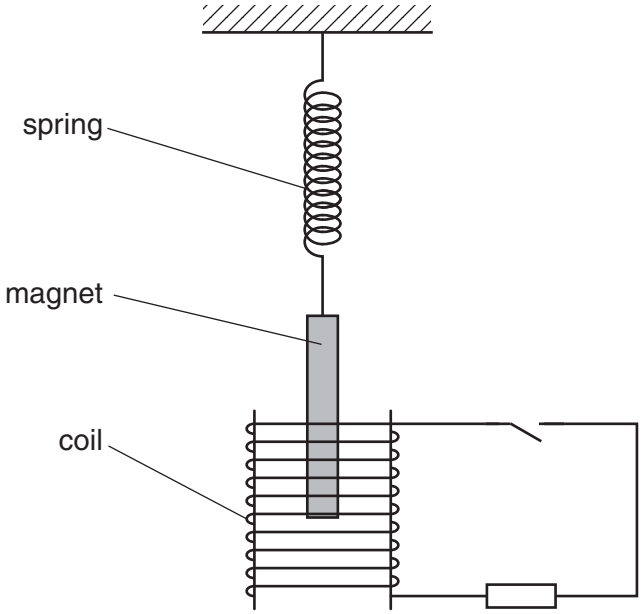

Fig. 3.1

The magnet hangs so that one pole is near the centre of a coil of wire.

The coil is connected in series with a resistor and a switch. The switch is open.

The magnet is displaced vertically and then allowed to oscillate with one pole remaining inside the coil. The other pole remains outside the coil.

At time $t = 0$, the magnet is oscillating freely as it passes through its equilibrium position. At time $t = 6.0$ s, the switch in the circuit is closed.

© UCLES 2017

The variation with time t of the vertical displacement y of the magnet is shown in Fig. 3.2.

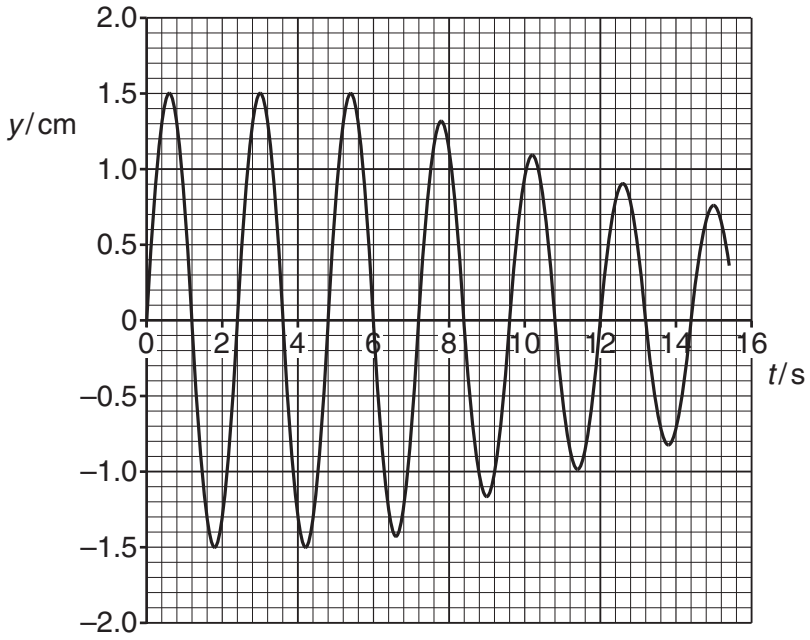

Fig. 3.2

(a) For the oscillating magnet, use data from Fig. 3.2 to calculate, to two significant figures,

(i) the frequency f,

f = ... Hz [2]

(ii) the energy of the oscillations during the time $t = 0$ to time $t = 6.0$ s.

energy = ... J [3]

© UCLES 2017

(b) (i) State Faraday's law of electromagnetic induction.

.....

.....

.....

.....[2]

(ii) Use Faraday's law and energy conservation to explain why the amplitude of the oscillations of the magnet reduces after time $t = 6.0\,s$.

.....

.....

.....

.....

.....

.....[3]

[Total: 10]

© UCLES 2017

4 **(a)** Explain the main principles behind the **use** of ultrasound to obtain diagnostic information about internal body structures.

.....

.....

.....

.....

.....

.....

.....

.....

.....

.....

.....

.....

.....

.....[6]

(b) A parallel beam of ultrasound has intensity I_0 as it enters a muscle of thickness 4.6 cm, as illustrated in Fig. 4.1.

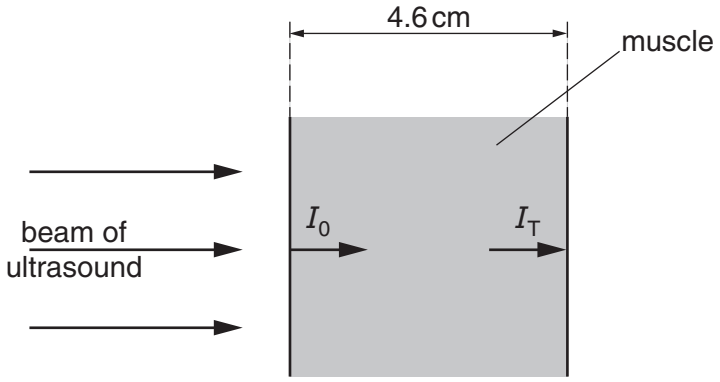

Fig. 4.1

The intensity of the beam just before it leaves the muscle is I_T.
The ratio I_0 / I_T is found to be 2.9.

Calculate the linear attenuation (absorption) coefficient μ of the ultrasound in the layer of muscle.

μ = ... cm^{-1} [3]

[Total: 9]

© UCLES 2017

5 **(a)** State two advantages of the transmission of data in digital form rather than in analogue form.

1. .....

.....

2. .....

.....

[2]

(b) An analogue signal S_I is converted into a digital signal D using an analogue-to-digital converter (ADC). After transmission of the digital signal, it is converted back to an analogue signal S_T using a digital-to-analogue converter (DAC), as illustrated in Fig. 5.1.

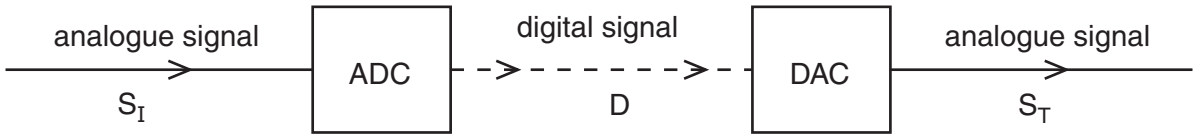

Fig. 5.1

(i) Outline the process by which the ADC converts the analogue signal S_I into the digital signal D.

.....

.....

.....[2]

(ii) The ADC and the DAC operate with the same sampling rate and the same number of bits in each digital number.

State the effect on the transmitted analogue signal S_T when, for the ADC and the DAC,

1. the sampling rate is increased,

.....

.....

2. the number of bits in each digital number is increased.

.....

.....

[2]

[Total: 6]

6 **(a)** State Coulomb's law.

.....

.....

.....[2]

(b) Two charged metal spheres A and B are situated in a vacuum, as illustrated in Fig. 6.1.

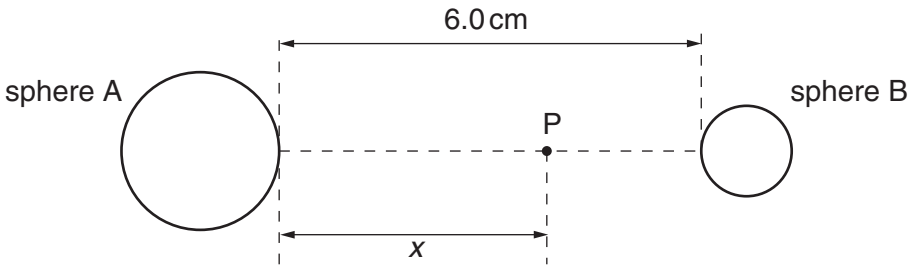

Fig. 6.1

The shortest distance between the surfaces of the spheres is 6.0 cm.

A movable point P lies along the line joining the centres of the two spheres, a distance *x* from the surface of sphere A.

The variation with distance *x* of the electric field strength *E* at point P is shown in Fig. 6.2.

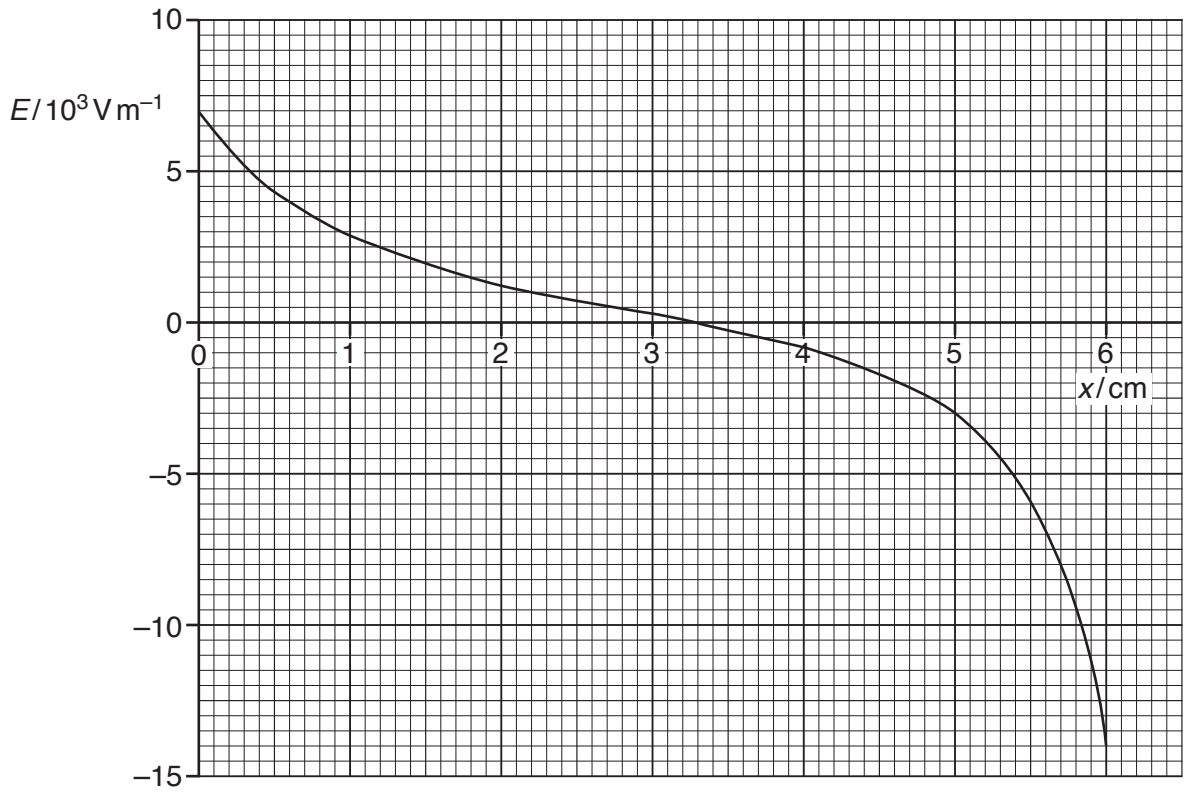

Fig. 6.2

© UCLES 2017

(i) Use Fig. 6.2 to explain whether the two spheres have charges of the same, or opposite, sign.

.....

.....

.....

.....[2]

(ii) A proton is at point P where $x = 5.0\,\text{cm}$.
Use data from Fig. 6.2 to determine the acceleration of the proton.

acceleration = ... m s^{-2} [3]

(c) Use data from Fig. 6.2 to state the value of x at which the rate of change of electric potential is maximum. Give the reason for the value you have chosen.

.....

.....

.....[2]

[Total: 9]

7 A capacitor consists of two parallel metal plates, separated by an insulator, as shown in Fig. 7.1.

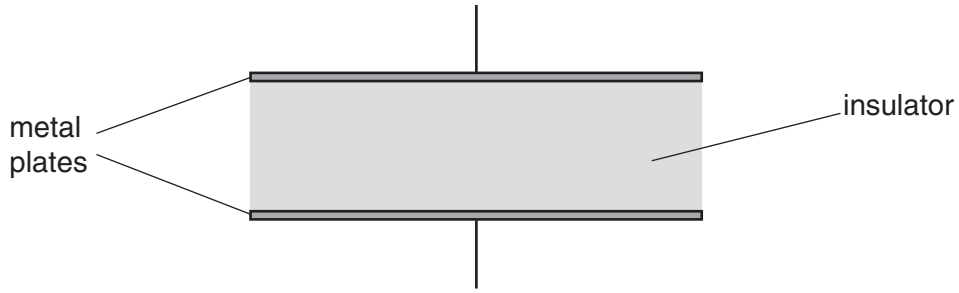

Fig. 7.1

(a) Suggest why, when the capacitor is connected across the terminals of a battery, the capacitor stores energy, not charge.

.....

.....

.....[2]

(b) Define the *capacitance* of the capacitor.

.....

.....

.....[2]

(c) The capacitor is charged so that the potential difference between its plates is V_0.
The capacitor is then connected across a resistor for a short time. It is then disconnected.
The energy stored in the capacitor is reduced to $\frac{1}{16}$ of its initial value.

Determine, in terms of V_0, the potential difference across the capacitor.

potential difference = ...[2]

[Total: 6]

© UCLES 2017

8 A student designs a circuit incorporating an operational amplifier (op-amp) as shown in Fig. 8.1.

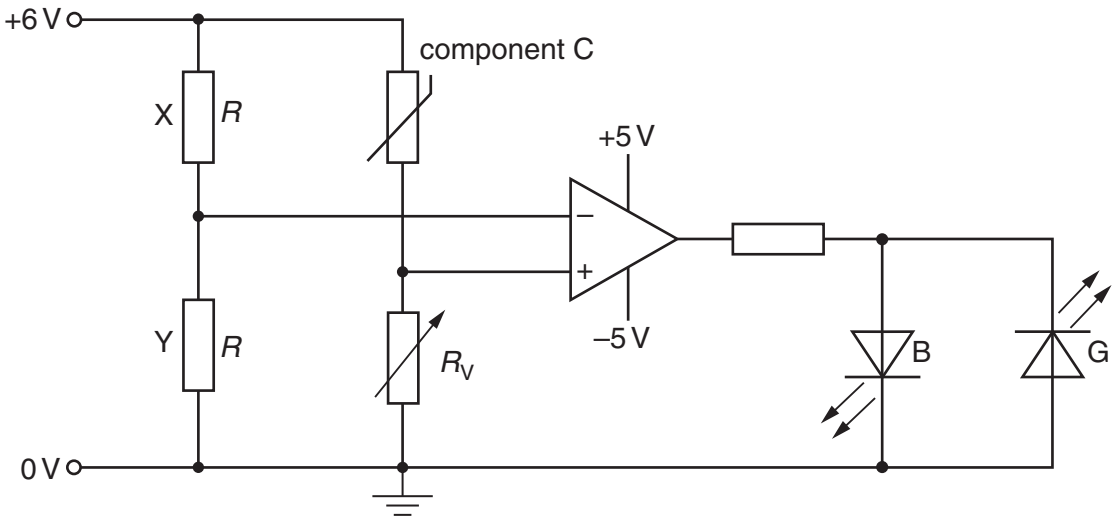

Fig. 8.1

(a) (i) On Fig. 8.1, draw a circle around the output device. [1]

(ii) State the purpose of this circuit.

.....

.....

.....[2]

(b) The resistors X and Y each have resistance *R*.
When conducting, the LED labelled B emits blue light and the LED labelled G emits green light.

(i) State whether blue light or green light is emitted when the resistance of component C is greater than the resistance R_V of the variable resistor. Explain your answer.

.....

.....

.....

.....

.....[3]

(ii) State and explain what is observed as the resistance of component C is reduced.

.....

.....

.....

.....

.....[3]

(c) Suggest the function of the variable resistor.

.....

.....[1]

[Total: 10]

© UCLES 2017

9 A Hall probe is placed near to one end of a current-carrying solenoid, as shown in Fig. 9.1.

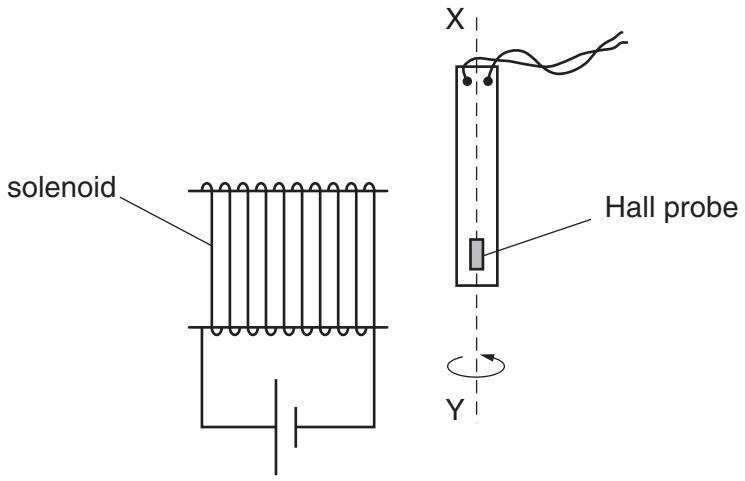

Fig. 9.1

The probe is rotated about the axis XY and is then held in a position so that the Hall voltage is maximum.

(a) Explain why

(i) a Hall probe is made from a *thin slice* of material,

.....

.....

.....[2]

(ii) in order for consistent measurements of magnetic flux density to be made, the current in the probe must be constant.

.....

.....[1]

(b) The probe is now rotated through an angle of 360° about the axis XY.
At angle $\theta = 0$, the Hall voltage V_H has maximum value V_{MAX}.

On Fig. 9.2, sketch the variation with angle θ of the Hall voltage V_H for one complete revolution of the probe about axis XY.

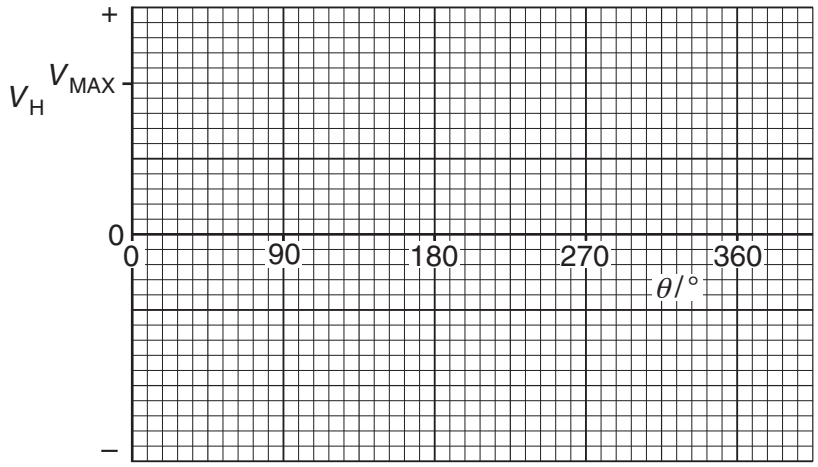

Fig. 9.2

[3]

[Total: 6]

10 (a) Briefly describe two phenomena associated with the photoelectric effect that cannot be explained using a wave theory of light.

1. .....

.....

2. .....

.....

[2]

(b) The maximum energy E_{MAX} of electrons emitted from a metal surface when illuminated by light of wavelength λ is given by the expression

$$E_{MAX} = hc\left(\frac{1}{\lambda} - \frac{1}{\lambda_0}\right)$$

where h is the Planck constant and c is the speed of light.

(i) Identify the symbol λ_0.

.....[1]

(ii) The variation with $\frac{1}{\lambda}$ of E_{MAX} for the metal surface is shown in Fig. 10.1.

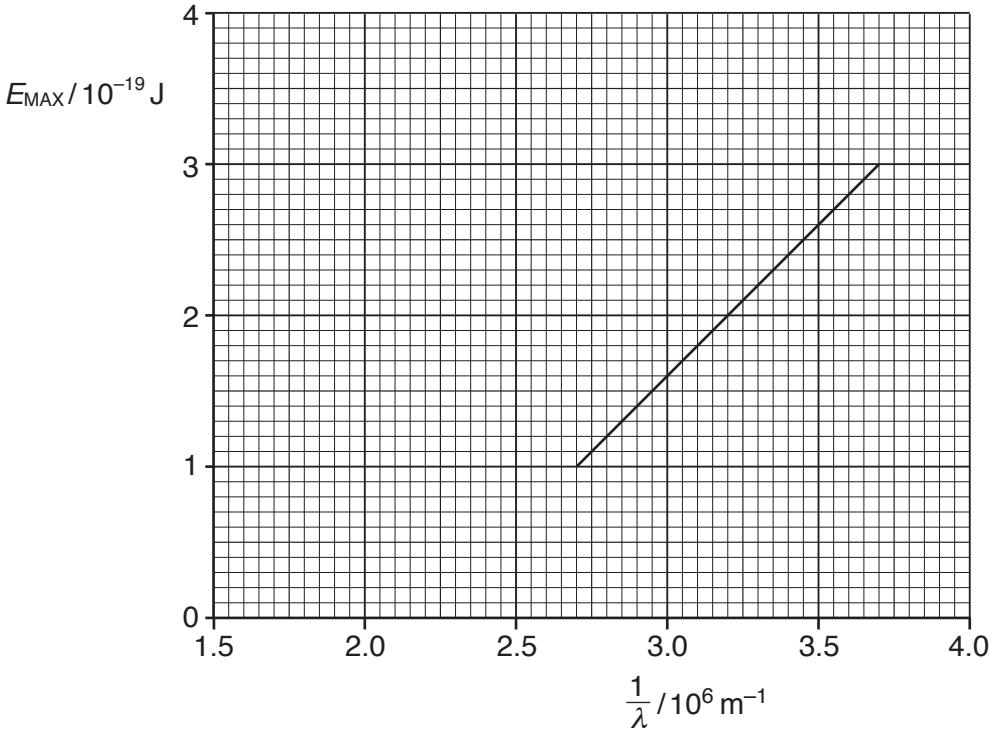

Fig. 10.1

1. Use Fig. 10.1 to determine the magnitude of λ_0.

λ_0 = ... m [1]

2. Use the gradient of Fig. 10.1 to determine a value for the Planck constant *h*.

h = ... J s [3]

(c) The metal surface in **(b)** becomes oxidised.
Photoelectric emission is still observed but the work function energy is increased.

On Fig. 10.1, draw a line to show the variation with $\frac{1}{\lambda}$ of E_{MAX} for the oxidised surface. [2]

[Total: 9]

© UCLES 2017

11 An electron has charge $-q$ and mass m. It is accelerated from rest in a vacuum through a potential difference V.

(a) Show that the momentum p of the accelerated electron is given by

$$p = \sqrt{(2mqV)}.$$

[2]

(b) The potential difference V through which the electron is accelerated is 120 V.

(i) State what is meant by the *de Broglie wavelength*.

.....

.....

.....[2]

(ii) Calculate the de Broglie wavelength of the electron.

wavelength = ... m [3]

(c) The separation of copper atoms in a copper crystal is approximately 2×10^{-10} m.

By reference to your answer in **(b)(ii)**, suggest whether electron diffraction could be observed using a beam of electrons that have been accelerated through a potential difference of 120 V and are then incident on a thin copper crystal.

.....

.....

.....[2]

[Total: 9]

© UCLES 2017

12 One nuclear reaction that can take place in a nuclear reactor may be represented, in part, by the equation

$$^{235}_{92}\text{U} + {}^{1}_{0}\text{n} \rightarrow {}^{95}_{42}\text{Mo} + {}^{139}_{57}\text{La} + 2{}^{1}_{0}\text{n} + \ldots\ldots\ldots\ldots + \text{energy}$$

Data for a nucleus and some particles are given in Fig. 12.1.

nucleus or particle	mass / u
$^{139}_{57}$La	138.955
$^{1}_{0}$n	1.00863
$^{1}_{1}$p	1.00728
$^{0}_{-1}$e	5.49×10^{-4}

Fig. 12.1

(a) Complete the nuclear reaction shown above. [1]

(b) **(i)** Show that the energy equivalent to 1.00 u is 934 MeV.

[3]

(ii) Calculate the binding energy per nucleon, in MeV, of lanthanum-139 ($^{139}_{57}$La).

binding energy per nucleon = ... MeV [3]

Question 12 continues on the next page.

(c) State and explain whether the binding energy per nucleon of uranium-235 ($^{235}_{92}U$) will be greater, equal to or less than your answer in **(b)(ii)**.

.....

.....

.....

.....[3]

[Total: 10]

Permission to reproduce items where third-party owned material protected by copyright is included has been sought and cleared where possible. Every reasonable effort has been made by the publisher (UCLES) to trace copyright holders, but if any items requiring clearance have unwittingly been included, the publisher will be pleased to make amends at the earliest possible opportunity.

To avoid the issue of disclosure of answer-related information to candidates, all copyright acknowledgements are reproduced online in the Cambridge International Examinations Copyright Acknowledgements Booklet. This is produced for each series of examinations and is freely available to download at www.cie.org.uk after the live examination series.

Cambridge International Examinations is part of the Cambridge Assessment Group. Cambridge Assessment is the brand name of University of Cambridge Local Examinations Syndicate (UCLES), which is itself a department of the University of Cambridge.